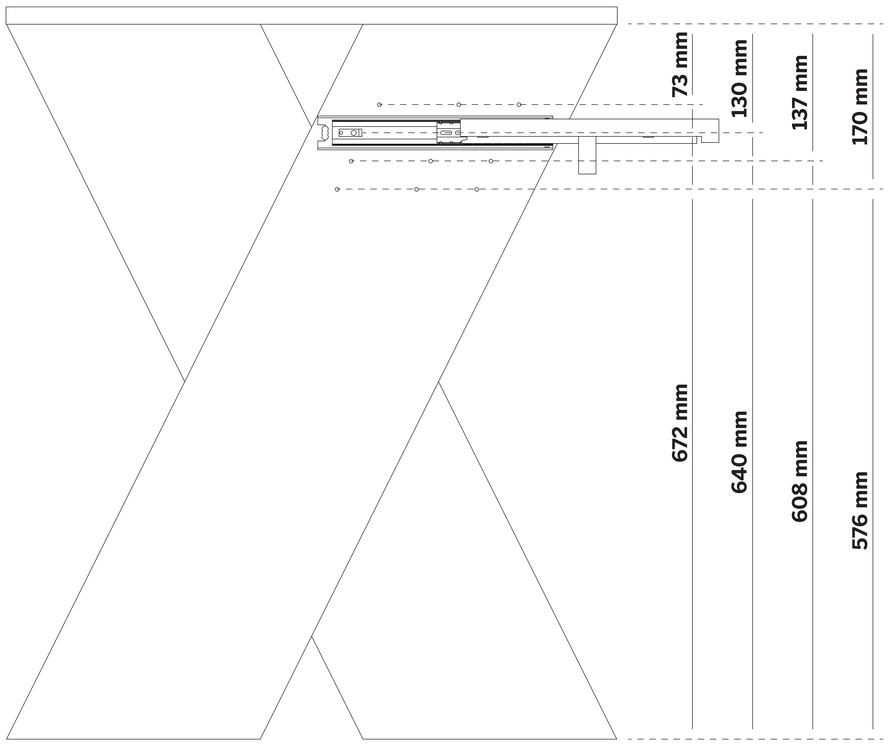

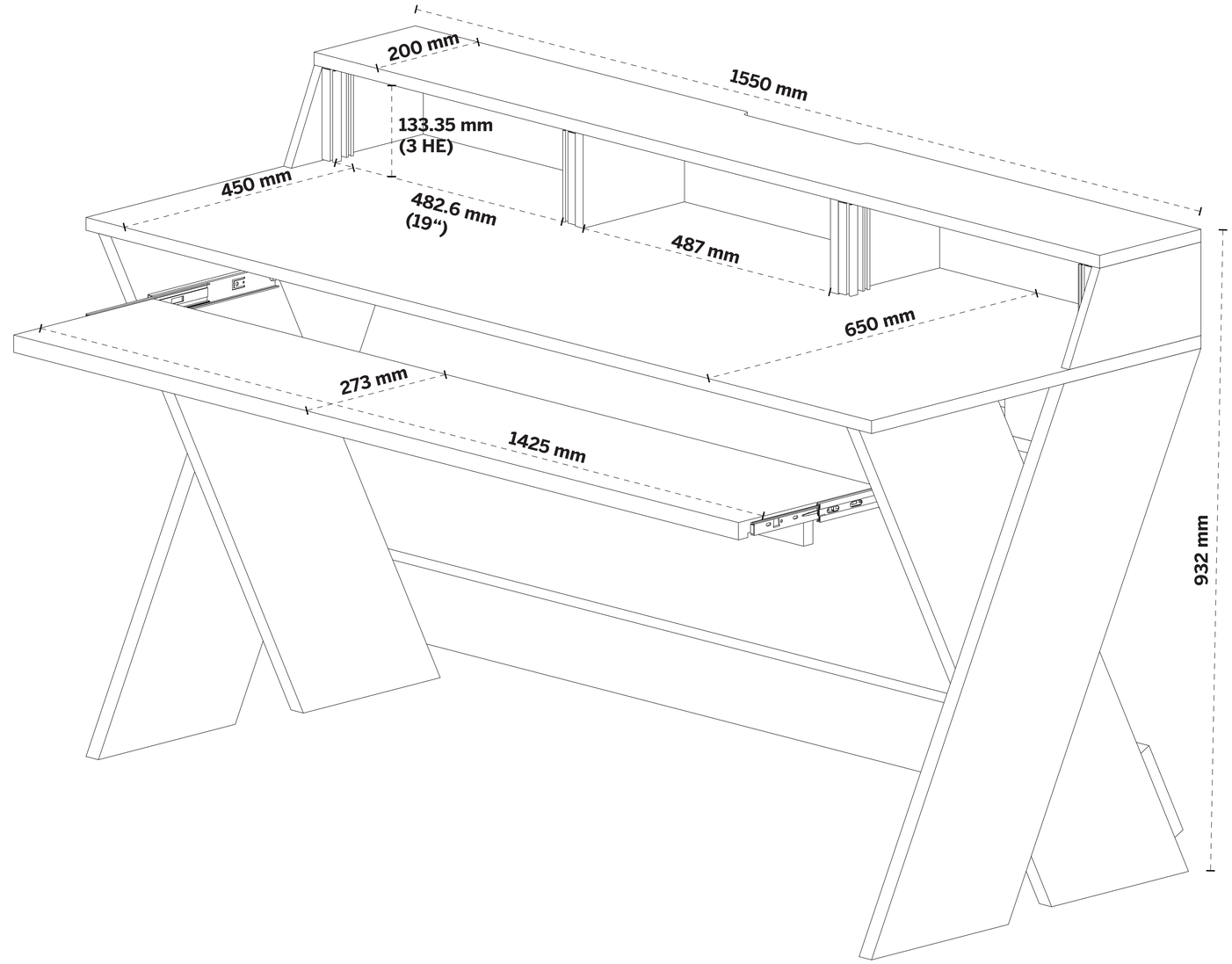

SOUND DESK PRO

GLORIOUS